KOBELT MANUFACTURING COMPANY LIMITED

Model 7180
Rudder Angle Indicator

A smaller version of our popular rudder angle indicator 7175, the 7180 rudder indicating system will provide you with a realtime visual display of the position of the rudder.

Whether you are manœuvring, power steering or changing course, an accurate readout of the rudder position will be displayed on a tri-coloured two-inch display.

This unit is particularly adapted to the integrated control head panels for models 7197, 7198 and utility panels such as model 7175-2000.

Up to five additional “repeater stations” can be installed using the 7180-S repeater.

Both the master and repeater have an optional backlit translucent display.

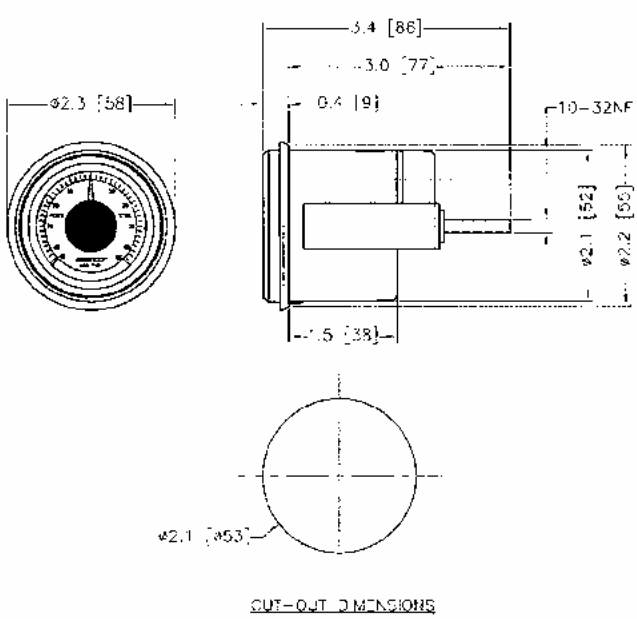

All Dimensions in inches (mm)

Approx. weight: 0.55 lb. (0.25 kg)

10/20
Schiffsausrüster
TOPLICHT
Tel.: +49 (0)40 - 88 90 100
www.toplicht.de

MODEL 7180

Troubleshooting :

Problem	Action
▪ Rudder indicator(s) not operational	Check for proper wiring and fuse
▪ Master indicator moves in opposite direction to rudder	Reverse wires V+ and V- at respective terminals
▪ Secondary (Slave) indicator moves in opposite direction to rudder	Reverse wires as above
▪ Port and Starboard hardover to hardover are not equal	Rudder angle feedback unit 7174 / 7168 not installed or adjusted properly
▪ Indicator(s) movement not in sequence with rudder movement	Calibrate scale

Fig. 1

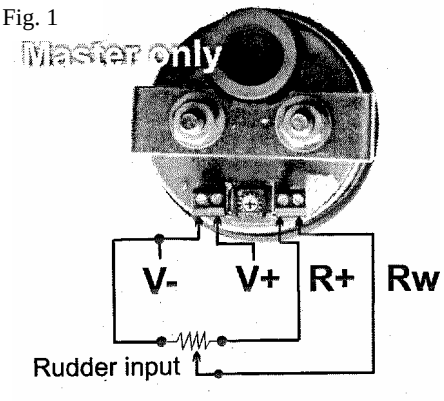

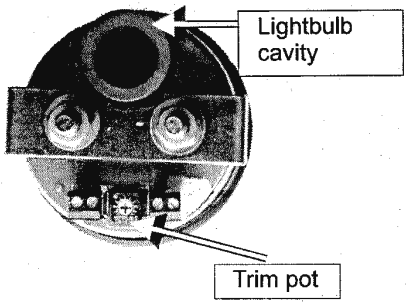

Fig. 2

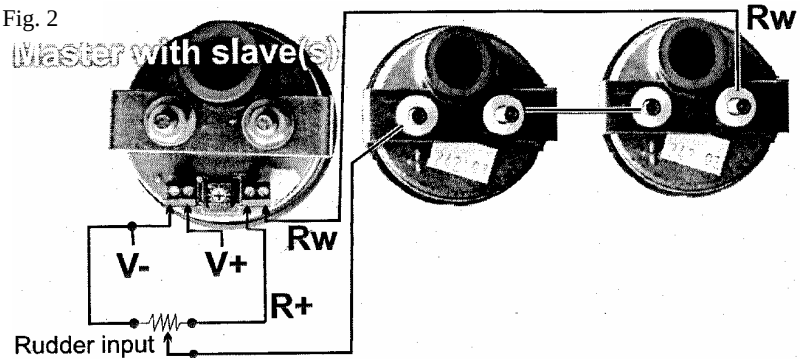

*** The wiring and adjustments should only be performed by qualified personnel.*

NOTES:

- Damage to the Rudder Indicator may occur if input voltage is reversed.
- Additional stations, if any, are to be connected in series as in figure 2
- In-line fuse (2A) or a breaker from the power source is recommended.
- Match lamp voltage to power supply voltage
- Lamp provided is of 12 VDC. (Option of 24 VDC is available)